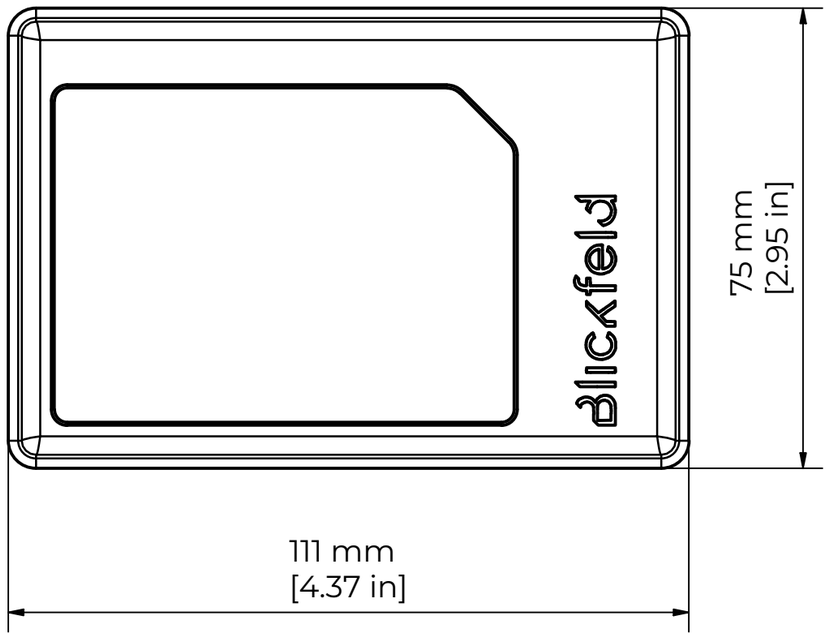

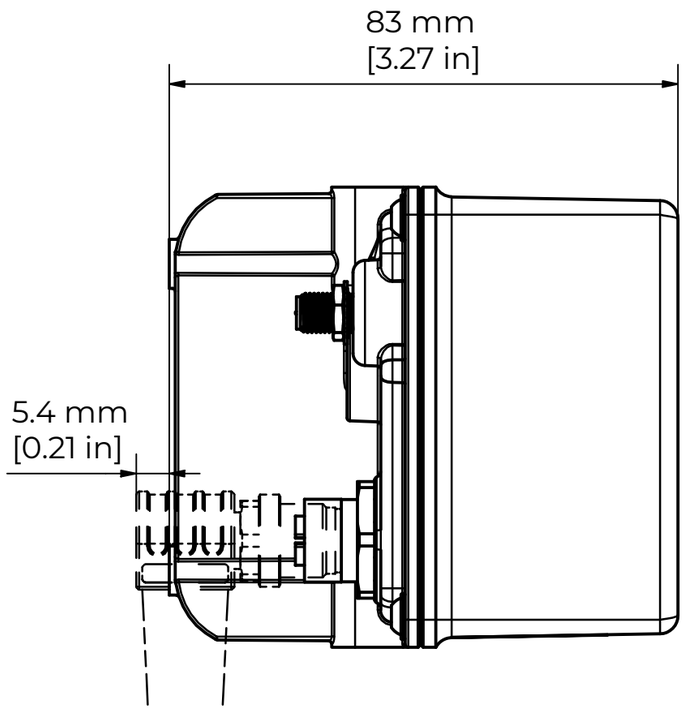

values in brackets are calculated and may contain round-off errors

Status: -	Material, approximate mass: -	Created by, date: 2022-11-08	
Project: -	Document Type: Customer Drawing	Approved by, date: -	
Blickfeld A SENSTAR COMPANY	Title: Qb2-ETR	Part Number: 10000343	Rev: A
		Scale: 1 : 1 / Size: A3	Sheet: 1/3

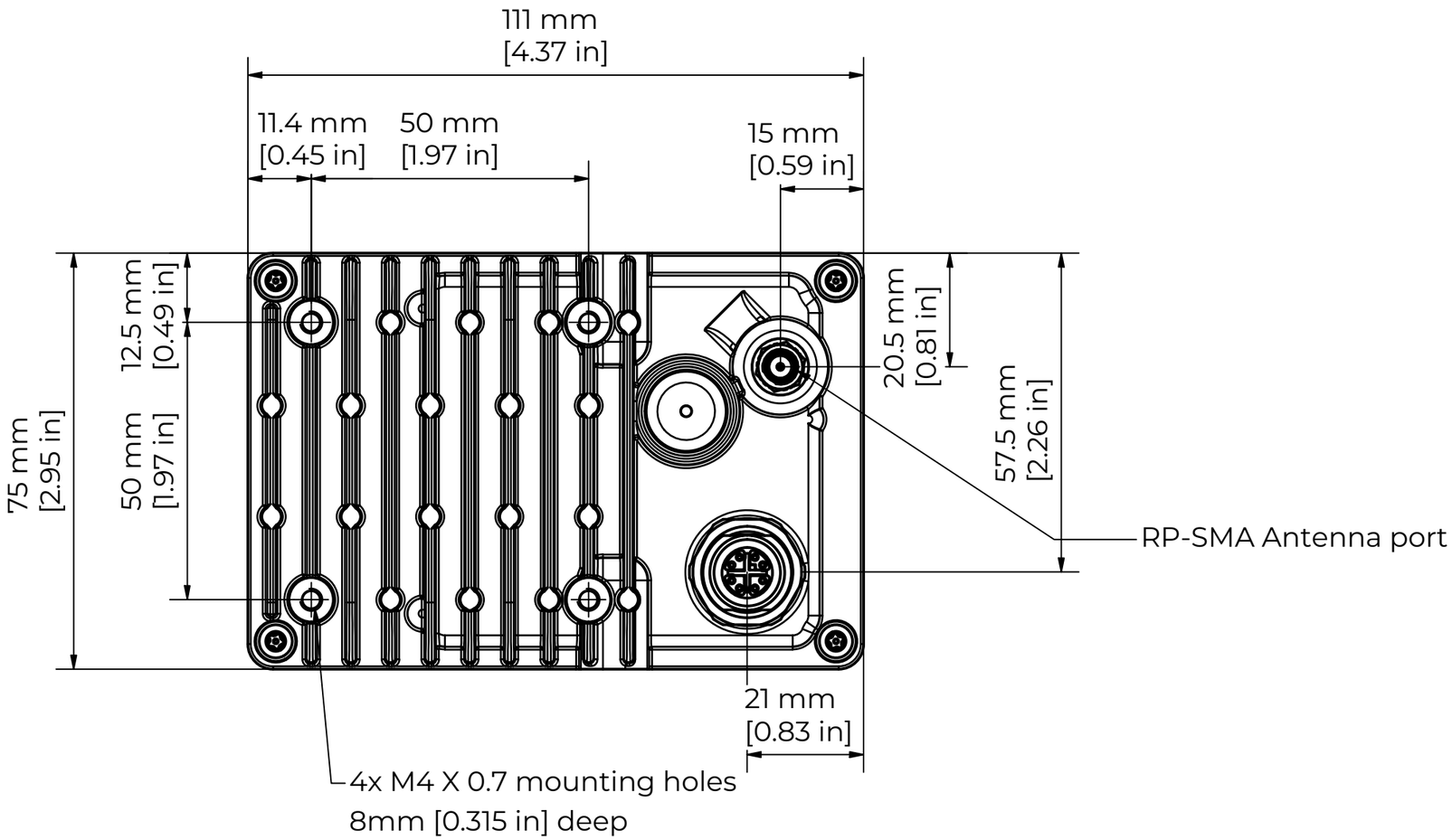

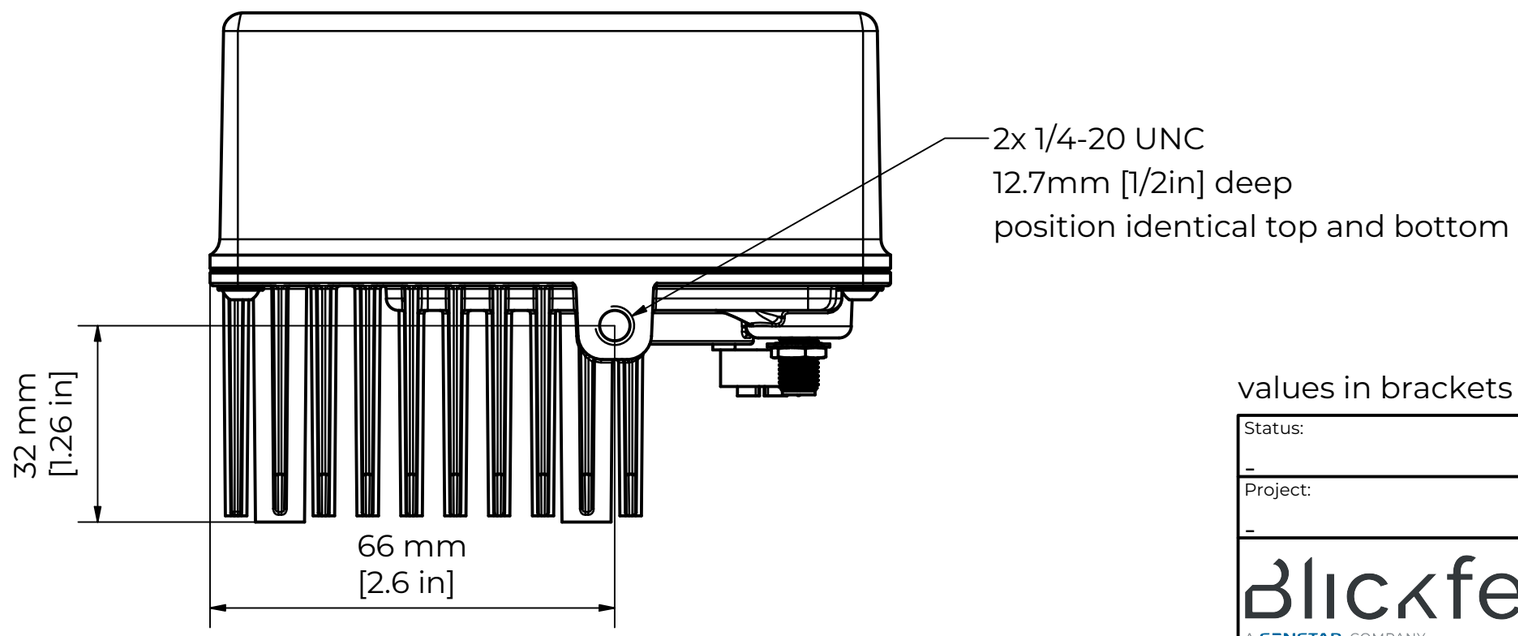

values in brackets are calculated and may contain round-off errors

Status: -	Material, approximate mass: -	Created by, date: 2022-11-08
Project: -	Document Type: Customer Drawing	Approved by, date: -
Blickfeld A SENSTAR COMPANY	Title: Qb2-ETR	Part Number: 10000343 / Rev: A
		Scale: 1 : 1 / Size: A3 / Sheet: 2/3

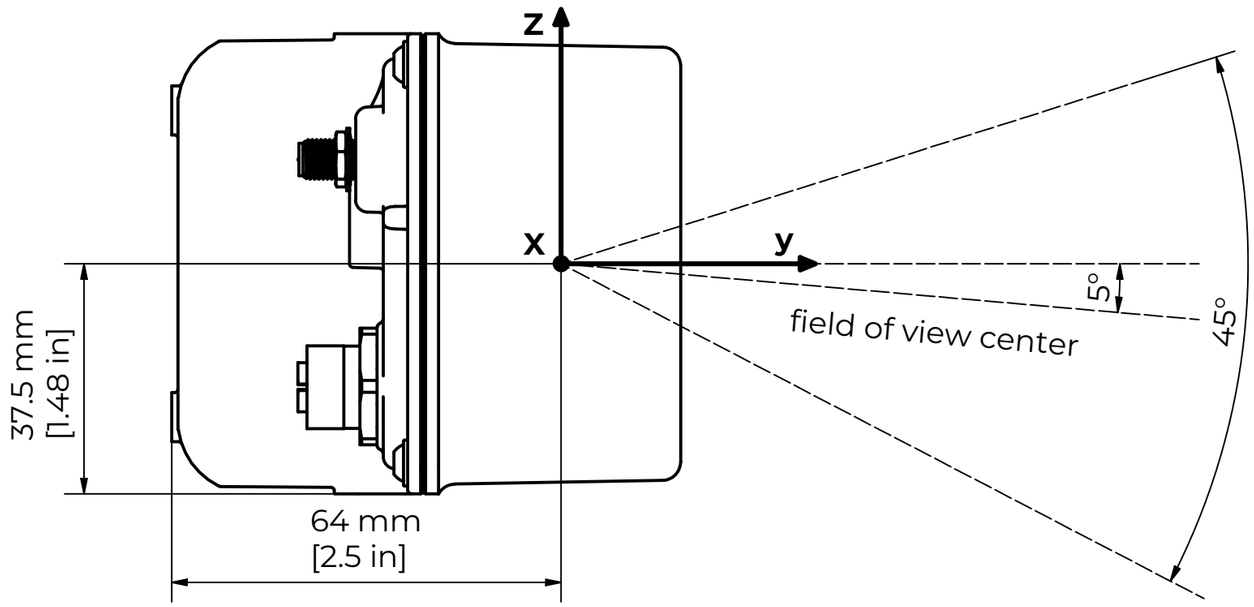

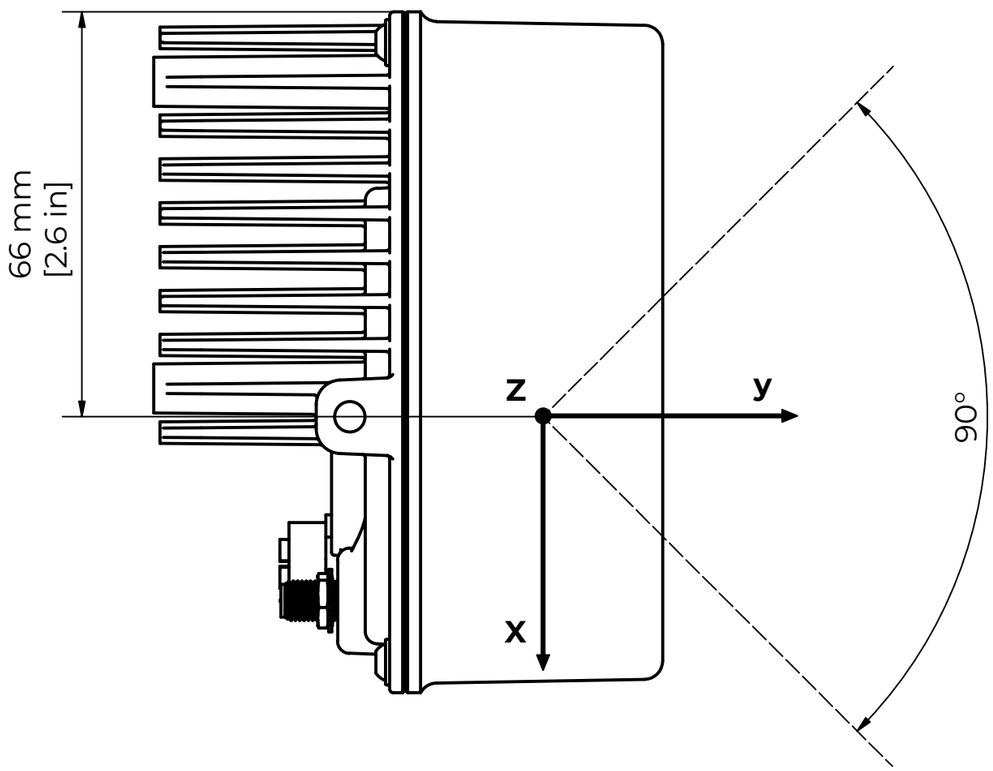

values in brackets are calculated and may contain round-off errors

Status: -	Material, approximate mass: -	Created by, date: 2022-11-08
Project: -	Document Type: Customer Drawing	Approved by, date: -
Blickfeld A SENSTAR COMPANY	Title: Qb2-ETR	Part Number: 10000343 / Rev: A
		Scale: 1 : 1 / Size: A3 / Sheet: 3/3